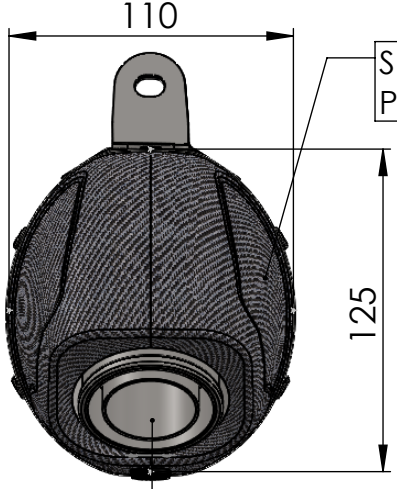

S.S. End Cap kit
P/N 308274711R

dB-Killer n°51R kit
P/N 308274803R

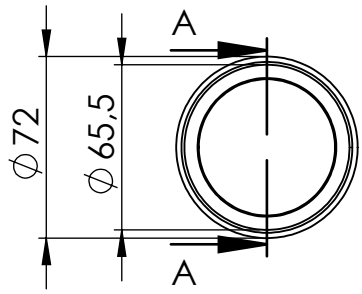

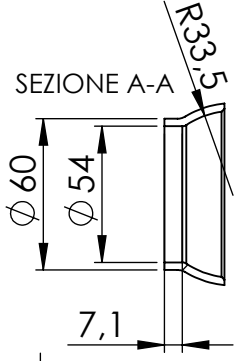

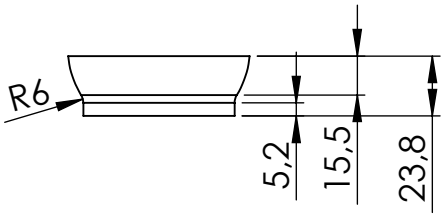

S.S. Bushing
P/N 207364

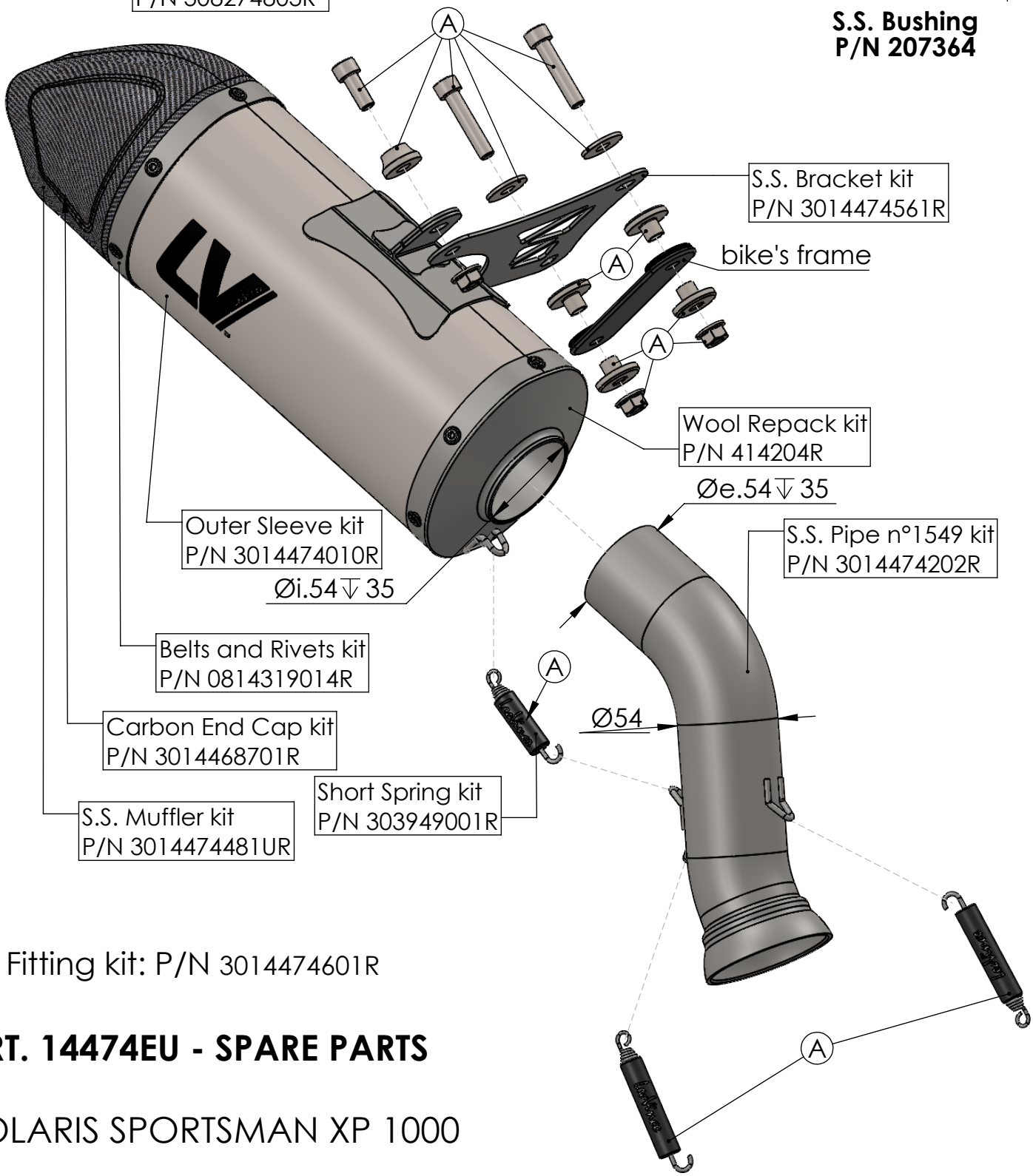

(A) Fitting kit: P/N 3014474601R

ART. 14474EU - SPARE PARTS

POLARIS SPORTSMAN XP 1000

SLIP-ON LV ONE EVO STAINLESS STEEL